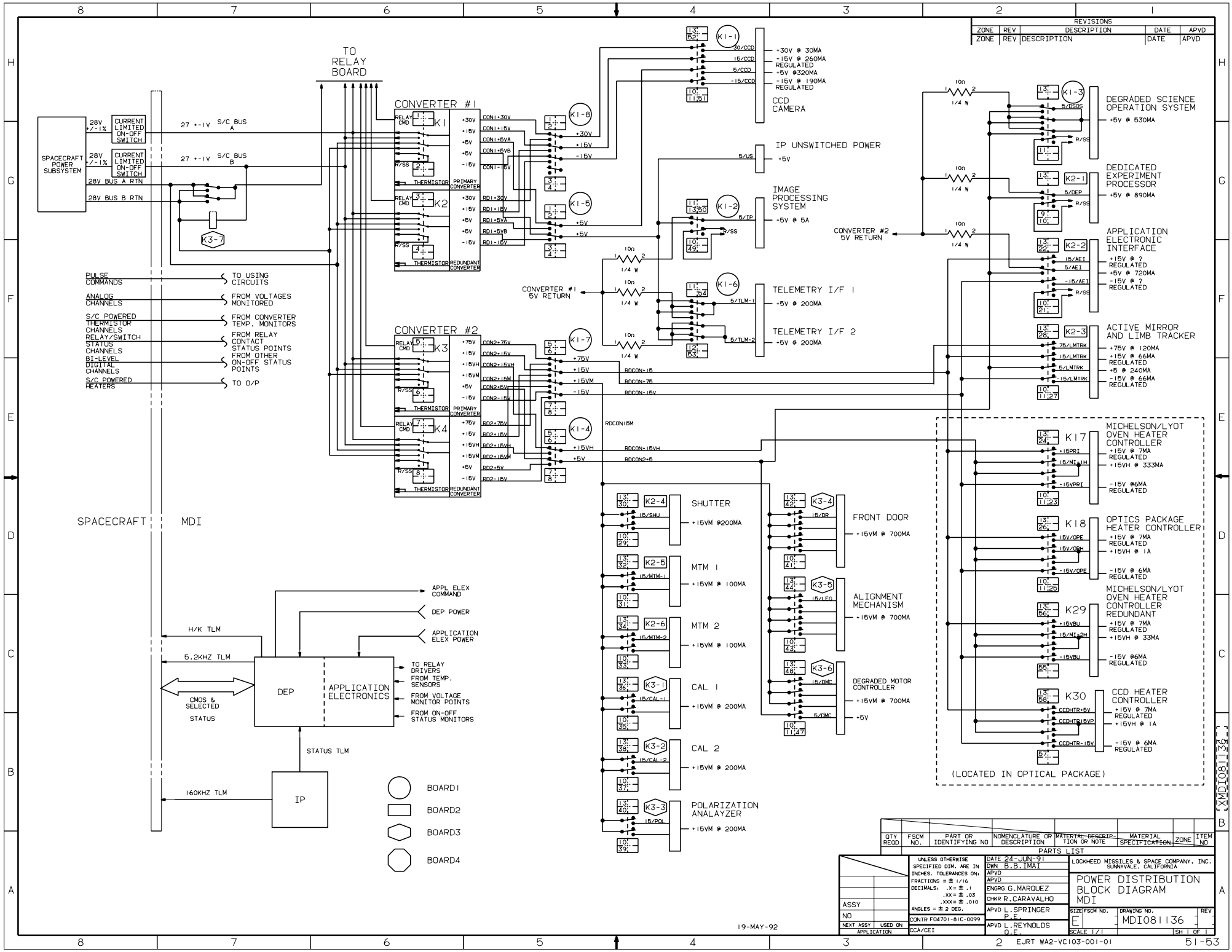
REVISIONS
ZONE REV DESCRIPTION DATE APVD
ZONE REV DESCRIPTION DATE APVD
TO RELAY BOARD
SPACECRAFT POWER SUBSYSTEM
28V +/-1% CURRENT LIMITED ON-OFF SWITCH
28V +/-1% CURRENT LIMITED ON-OFF SWITCH
28V BUS A RTN
28V BUS B RTN
27 +-1V S/C BUS A
27 +-1V S/C BUS B
K3-7
CONVERTER #1
K1
K2
THERMISTOR
PRIMARY CONVERTER
REDUNDANT CONVERTER
CONVERTER #2
K3
K4
K1-1
K1-2
K1-3
K1-4
K1-5
K1-6
K1-7
K1-8
CCD CAMERA
IP UNSWITCHED POWER
IMAGE PROCESSING SYSTEM
TELEMETRY I/F 1
TELEMETRY I/F 2
DEGRADED SCIENCE OPERATION SYSTEM
DEDICATED EXPERIMENT PROCESSOR
APPLICATION ELECTRONIC INTERFACE
ACTIVE MIRROR AND LIMB TRACKER
CONVERTER #2 5V RETURN
CONVERTER #1 5V RETURN
PULSE COMMANDS
TO USING CIRCUITS
ANALOG CHANNELS
FROM VOLTAGES MONITORED
S/C POWERED THERMISTOR CHANNELS
FROM CONVERTER TEMP. MONITORS
RELAY/SWITCH STATUS CHANNELS
FROM RELAY CONTACT STATUS POINTS
BI-LEVEL DIGITAL CHANNELS
FROM OTHER ON-OFF STATUS POINTS
S/C POWERED HEATERS
TO O/P
SPACECRAFT
MDI
SHUTTER
MTM 1
MTM 2
CAL 1
CAL 2
POLARIZATION ANALAYZER
FRONT DOOR
ALIGNMENT MECHANISM
DEGRADED MOTOR CONTROLLER
MICHELSON/LYOT OVEN HEATER CONTROLLER
OPTICS PACKAGE HEATER CONTROLLER
MICHELSON/LYOT OVEN HEATER CONTROLLER REDUNDANT
CCD HEATER CONTROLLER
(LOCATED IN OPTICAL PACKAGE)
APPL ELEX COMMAND
DEP POWER
APPLICATION ELEX POWER
H/K TLM
5.2KHZ TLM
CMOS & SELECTED STATUS
DEP
APPLICATION ELECTRONICS
TO RELAY DRIVERS
FROM TEMP. SENSORS
FROM VOLTAGE MONITOR POINTS
FROM ON-OFF STATUS MONITORS
STATUS TLM
160KHZ TLM
IP
BOARD1
BOARD2
BOARD3
BOARD4
QTY REQD | FSCM NO. | PART OR IDENTIFYING NO | NOMENCLATURE OR DESCRIPTION | MATERIAL DESCRIPTION OR NOTE | MATERIAL SPECIFICATION | ZONE | ITEM NO
PARTS LIST
UNLESS OTHERWISE SPECIFIED DIM. ARE IN INCHES. TOLERANCES ON: FRACTIONS = ± 1/16 DECIMALS: .X = ± .1 .XX = ± .03 .XXX = ± .010 ANGLES = ± 2 DEG.
CONTR F04701-81C-0099
CCA/CEI
DATE 24-JUN-91
DWN B.B.IMAI
APVD
APVD
ENGRG G.MARQUEZ
CHKR R.CARAVALHO
APVD L.SPRINGER P.E.
APVD L.REYNOLDS Q.E.
LOCKHEED MISSILES & SPACE COMPANY, INC. SUNNYVALE, CALIFORNIA
POWER DISTRIBUTION BLOCK DIAGRAM MDI
SIZE E FSCM NO. DRAWING NO. MDI081136 REV
SCALE 1/1 SH 1 OF 1
ASSY NO
NEXT ASSY USED ON
APPLICATION
19-MAY-92
EJRT WA2-VC103-001-01
51-53