NOTES:

1. INSTALL TEMP SENSORS IN LOCATION SHOWN PER PROCEDURE MDI-320019. ITEMS 4,5,6 TO BE APPLIED OVER SENSORS PER PROCEDURE.

REVISIONS				
ZONE	REV	DESCRIPTION	DATE	APVD
-	A	MODIFY CABLE ROUTING AND CONNECTOR LOCATION.	12JAN93	BKJ

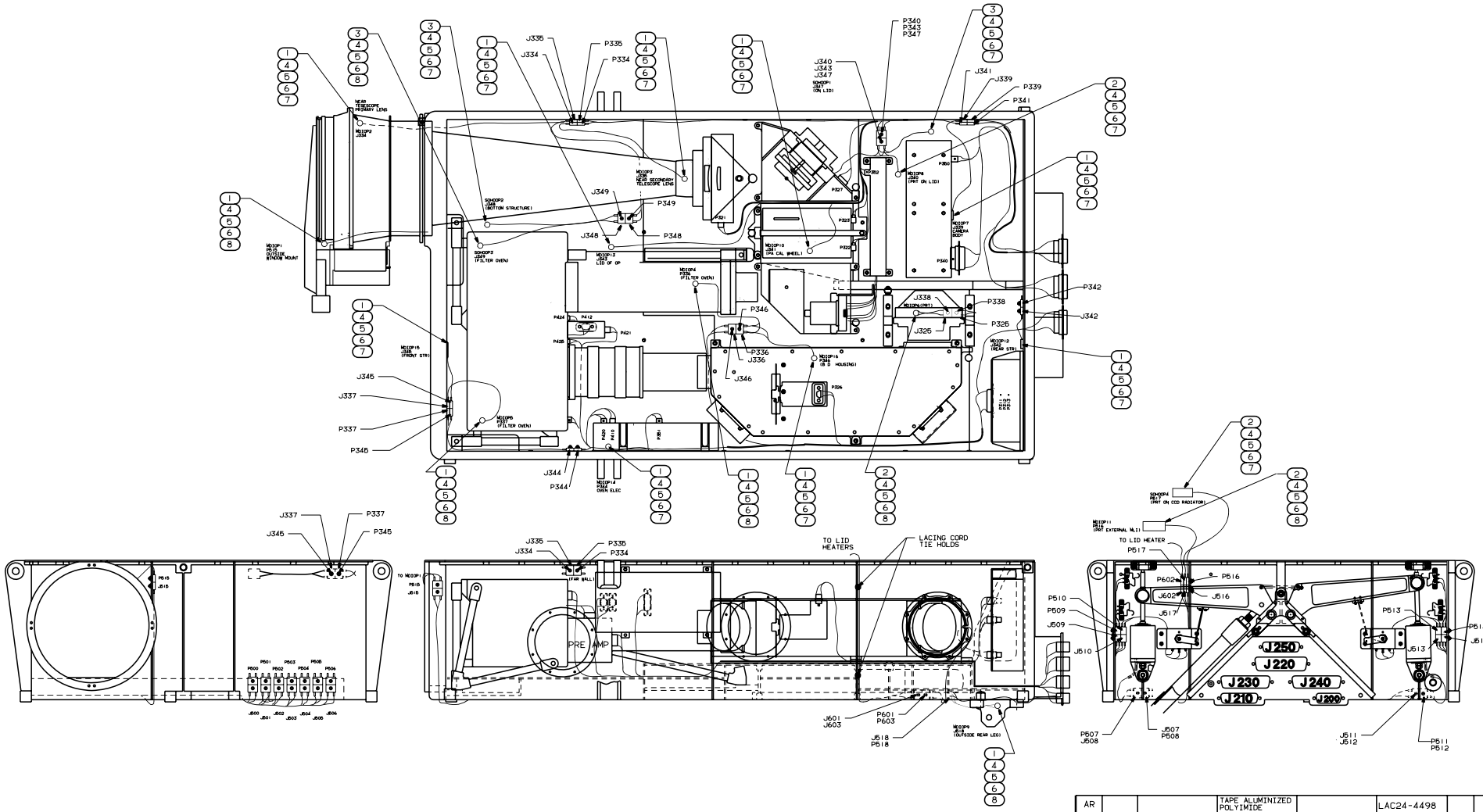

QTY REQD	FSCM	PART OR IDENTIFYING NO	NOMENCLATURE OR DESCRIPTION	MATERIAL DESCRIPTION OR NOTE	MATERIAL SPECIFICATION	ZONE	ITEM NO
AR			TAPE ALUMINIZED POLYIMIDE		LAC24-4498		8
AR			TAPE POLYIMIDE		LAC24-4450		7
AR			TAPE ALUMINUM		LAC24-4451		6
AR		MCGAHN-NUSIL SP-136/6	SILICONE RTV PRIMER		LAC40-4732		5
AR		MCGAHN-NUSIL CV-2943	SILICONE RTV		LAC40-4730		4
3		126-153YPVB01	FENWALL	THERMISTER			3
4		118MF-2000-A	ROSEMOUNT	PLATINUM RES. THERMOMETER			2
13		YSI-GSFC-S-311 -P-18-081-92R	YELLOW SPRINGS INSTRUMENT	THERMISTER			1

PARTS LIST

MDI141036	
NEXT ASSY	USED ON
APPLICATION	

UNLESS OTHERWISE SPECIFIED DIM. ARE IN INCHES. TOLERANCES ON: FRACTIONS = ± 1/16 DECIMALS: .X = ± .1 .XX = ± .03 .XXX = ± .010 ANGLES = ± 2 DEG.

CONTR PR6209

CCA/CI

DATE 92-28-04
DWN B.K.JURCEVICH
APVD B.CARAVALHO
APVD S.J. BOCHNER
ENGRG B.K.JURCEVICH
CHKR B.CARAVALHO
APVD L. SPRINGER
APVD L. REYNOLDS

LOCKHEED MISSILES & SPACE COMPANY, INC. SUNNYVALE, CALIFORNIA

TEMPERATURE SENSOR INSTALLATION

WIRING HARNESS
OPTICS PACKAGE

SIZE	FSCM	DRAWING NO	REV
E	65113	MDI151002	A

SCALE 5/8 SH 1 OF 1

MDI151002 1 A